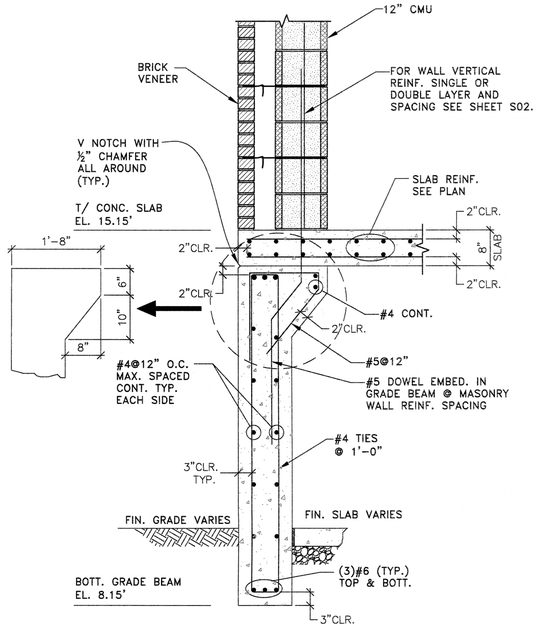

SECTION A
SCALE: 3/4"=1'-0"

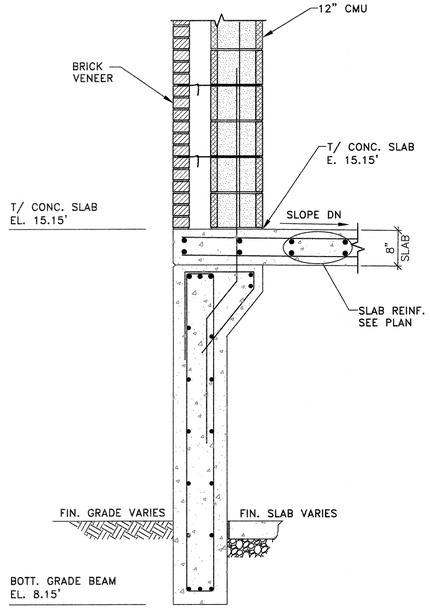

SECTION B
SCALE: 3/4"=1'-0"

NOTE:
FOR INFORMATION NOT SHOWN SEE SECTION A THIS SHEET.

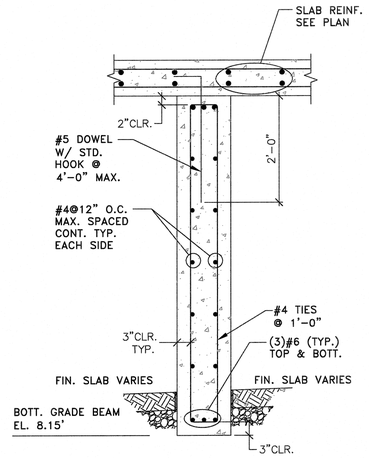

DETAIL 1
SCALE: 3/4"=1'-0"

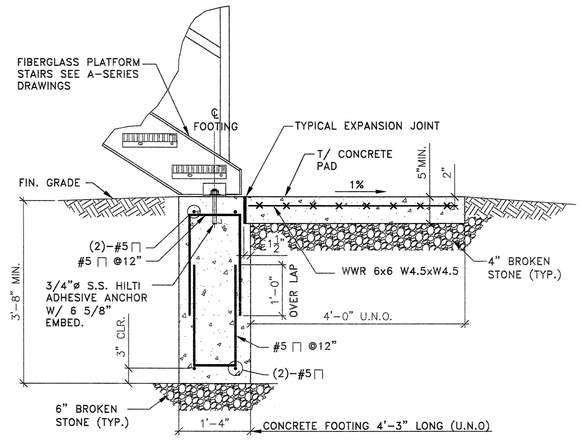

DETAIL 3 TYPICAL STAIR FOOTING SECTION
SCALE: N.T.S.

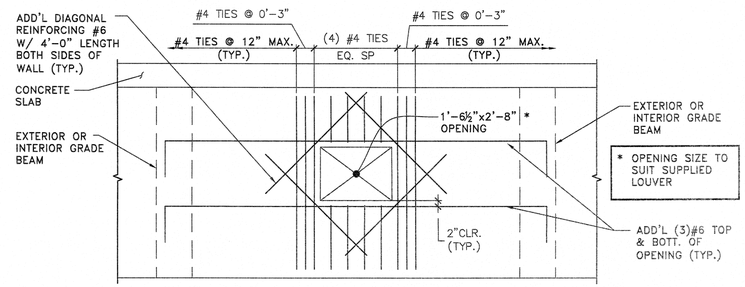

DETAIL 4 TYPICAL ADDITIONAL REINFORCING AT ACCESS LOUVER
SCALE: N.T.S.

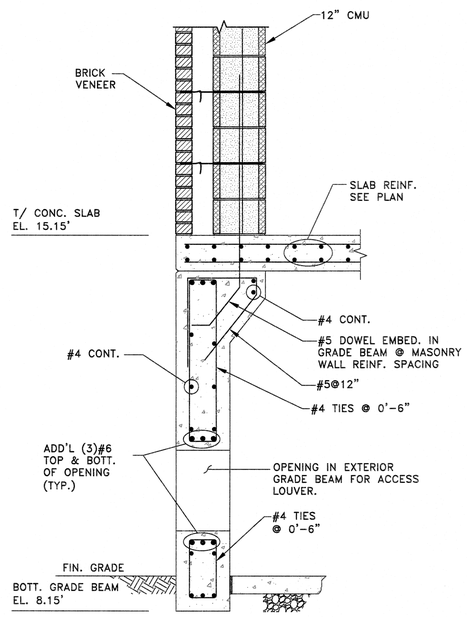

SECTION C
SCALE: 3/4"=1'-0"

NOTE:
FOR INFORMATION NOT SHOWN SEE SECTION A THIS SHEET.

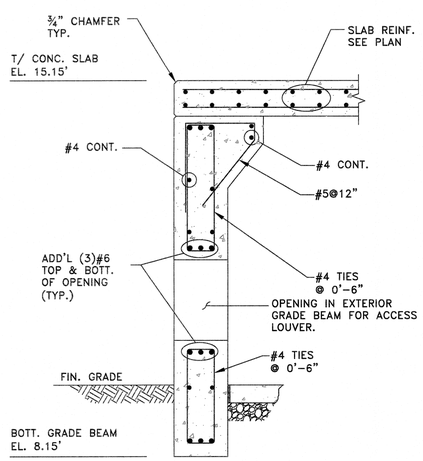

SECTION D
SCALE: 3/4"=1'-0"

NOTE:
FOR INFORMATION NOT SHOWN SEE SECTION A THIS SHEET.

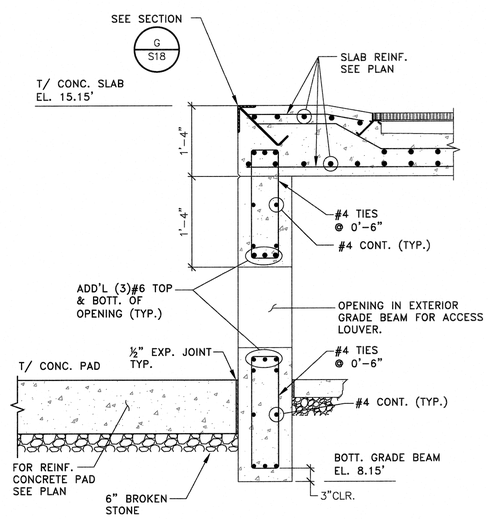

DETAIL 2
SCALE: 3/4"=1'-0"

NOTE:
FOR INFORMATION NOT SHOWN SEE SECTION C/S15.

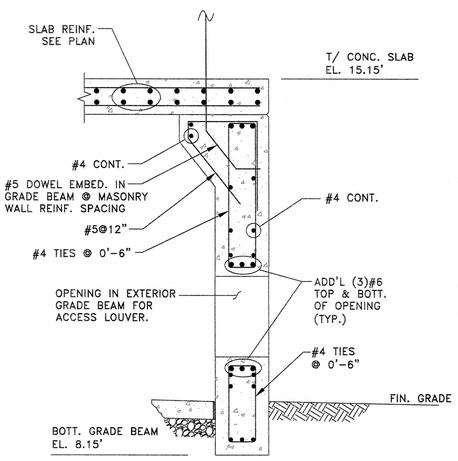

DETAIL 5
SCALE: 3/4"=1'-0"

NOTE:
FOR INFORMATION NOT SHOWN SEE SECTION C/S15.

APPROVED:
Richard A. Alaimo
PROFESSIONAL ENGINEER
NEW JERSEY LICENSE NO. 13195

REVISIONS	DATE	BY

RICHARD A. ALAIMO ENGINEERING COMPANY
Consulting Engineers
NJDCA 24GA27988800
200 HIGH STREET MOUNT HOLLY, N.J.
2 MARKET STREET PATERSON, N.J.

GRIT CHAMBER UPGRADE

GRIT CLASSIFIER BUILDING SECTIONS AND DETAILS

SCALE: AS NOTED

CLIENT: WOODBRIDGE TOWNSHIP

PROJECT LOCATION: WOODBRIDGE TOWNSHIP MIDDLESEX COUNTY NEW JERSEY

PROJECT NO.: B-0726-0023-000

CONTRACT NO.: 1230

DATE: APRIL 2017

DESIGNED BY: PG

DRAWN BY: PG

CHECKED BY:

DEPT. HEAD:

SHEET S15

FILE NO.:

Plotted: 4/10/2017 3:30 PM Last saved: 1/4/2017 2:19 PM File Name: K:\Projects\B0726002300\Drawings\City-S15_Grit_Classifier_Building_Sections_&_Details.dwg