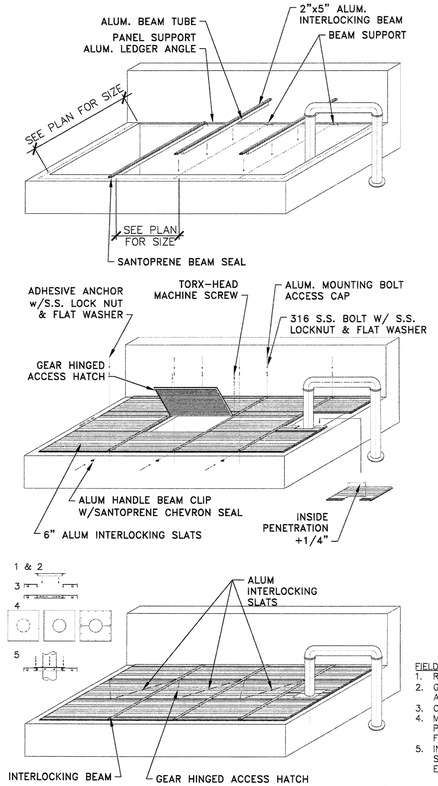

FIELD INSTALLED PENETRATION INSTRUCTIONS
1. REMOVE PLATE
2. GLUE W/SIKAPLEX OR EQUAL TOP ALUM. ANGLE
3. CLAMP TOP & BOTTOM ANGLES w/ SCREW
4. MARK & CUT HOLE IN THE PLATE. CUT PLATE INTO TWO PARTS& DRILL HOLES FOR SCREW
5. INSTALL PLATE W/SCREW. SEAL OR SIKAFLEX AROUND PIPE OR ANY OTHER EQUIPMENT.

2 GRIT CHAMBER COVER INSTALLATION
NOT TO SCALE

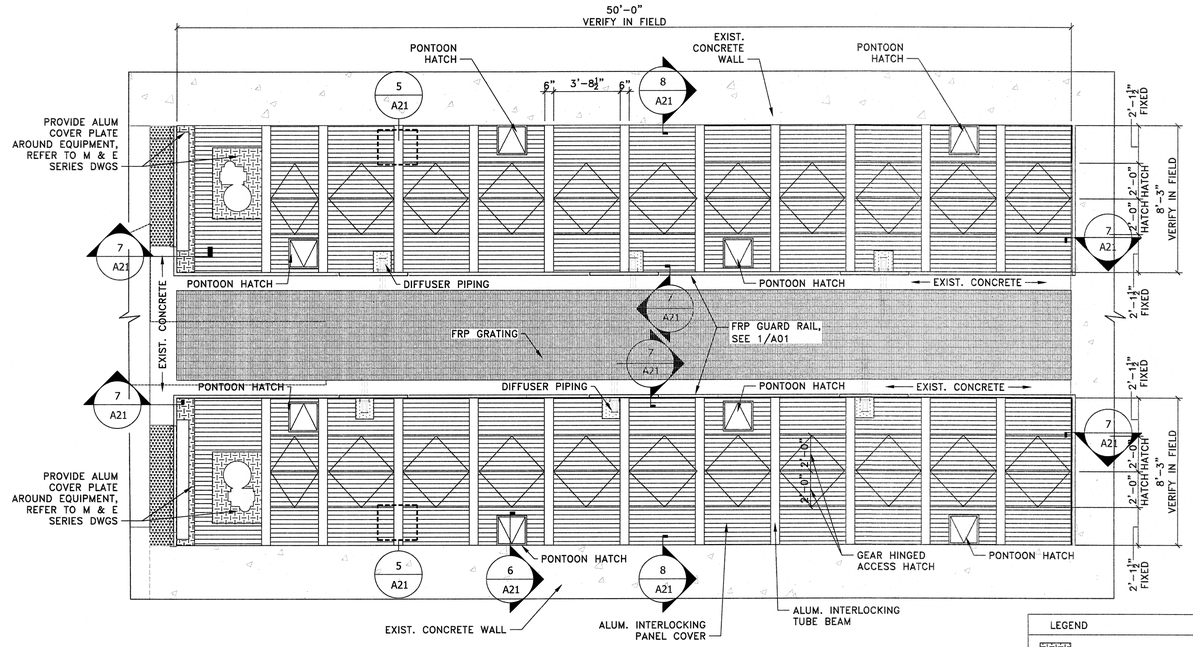

1 PLAN-GRIT CHAMBER COVERS
SCALE: 1/4"=1'-0"

LEGEND
- ALUM COVER PLATE
- ALUM SLAT COVER

NOTES:
1. ALL DETAILS SHOWN ON THIS DRAWING IS PER HALLSTEN CORP. AND IS FOR USE ON THIS PARTICULAR PROJECT. IT IS STRICTLY FORBIDDEN TO USE THESE DETAILS ELSEWHERE EXCEPT WITH PRIOR WRITTEN CONSENT FROM HALSTON CORP.
2. THE CONTRACTOR SHALL SUBMIT DRAWINGS, CALCULATIONS AND TEST RESULTS, SIGNED AND SEALED BY PROFESSIONAL ENGINEER LICENSED IN NJ
3. ALL STRUCTURAL COMPONENTS SHALL BE DESIGNED TO SUPPORT DEAD LOAD PLUS A LIVE LOAD OF 50 POUNDS PER SQUARE FOOT OF SURFACE. MAXIMUM DEFLECTION SHALL NOT EXCEED L/240 OF THE SPAN OF THAT COMPONENT.
4. CONCENTRATED LIVE LOAD: 400 POUNDS LOAD ON A 6"X6" AREA LOCATED ANYWHERE ON THE SURFACE OF THE STRUCTURE.
5. VERIFY ALL DIMENSION IN FIELD
6. ALL ALUM USED IN THE FABRICATION OF COVER AND PLATE SHALL BE ALLOY 6061-T6
7. THE COVER SHALL HAVE INTEGRAL NON-SKID SURFACE
8. THE ALUM COVER SHALL BE COMPOSED OF BEAMS & PANELS, ALL PANELS SHALL INTERLOCK WITH ADJOINING BEAMS AND WITHOUT THE USE OF THREADED FASTENERS. UPLIFT WILL BE RESISTED BY THE USE OF INTEGRAL LATCH SYSTEM . THE WEIGHT OF AN INDIVIDUAL PANEL SHALL NOT EXCEED 150 POUNDS. EACH REMOVABLE PANEL SHALL BE EASILY REMOVABLE WITHOUT DISRUPTION OF ADJACENT PANELS AND THE LIFTING FORCE SHALL NOT EXCEED THE DEAD WIGHT OF THE PANEL.
9. CHECK AND COORDINATE THE LOCATION OF DIFFUSER PIPING BEFORE INSTALLING THE COVERS
10. INSTALL ALUM PLATE COVER OVER PIPE PENETRATIONS
11. CLEAN AND LEVEL EXISTING CONCRETE WALL AND LEDGE, BEFORE INSTALLING ALUM SUPPORT BEAMS FOR COVERS
12. ALUM SURFACES IN CONTACT WITH CONCRETE, GROUT AND DISSIMILAR METAL SHALL BE COATED WITH TWO(2) COATS OF BITUMINOUS PAINT, MYLAR ISOLATORS OR OTHER APPROVED MATERIALS
13. SEE S-SERIES DWGS FOR FASTENER DETAILS
14. PROVIDE SLOTTED HOLES IN BEAMS TO ACCOMMODATE THERMAL EXPANSION & CONTRACTION OF COVERS
15. SEE SPECIFICATION FOR MORE INFORMATION ON COVER FINISHES AND INSTALLATION.

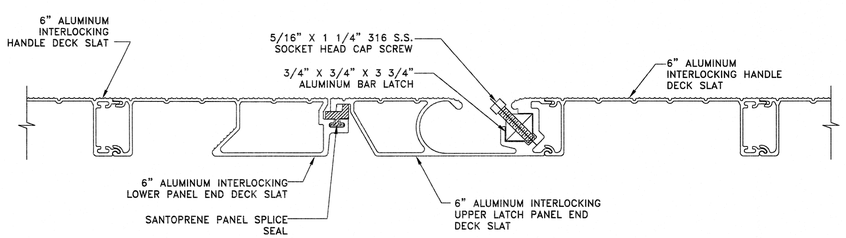

3 SECTION SPLICE HATCH COVER
SCALE: 1"=1'-0"

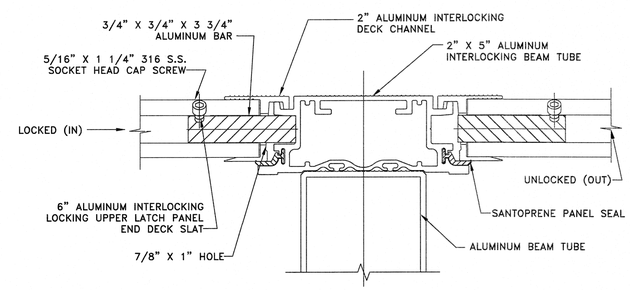

4 SECTION SPLICE HATCH COVER
SCALE: 1"=1'-0"

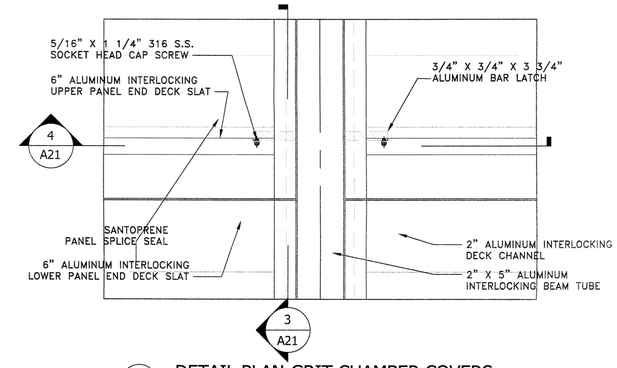

5 DETAIL PLAN-GRIT CHAMBER COVERS
SCALE: 1"=1'-0"

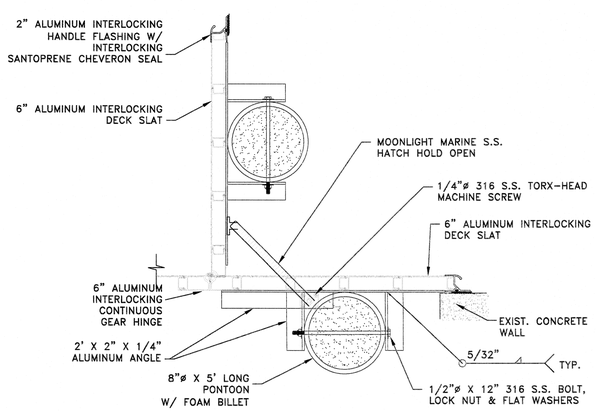

6 DETAIL-PONTOON HATCH
SCALE: 1 1/2"=1'-0"

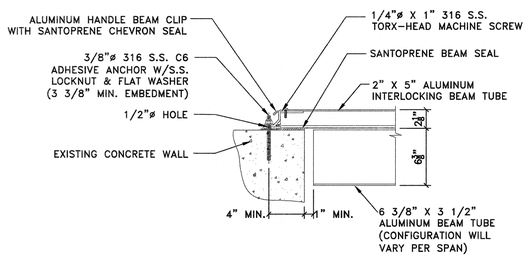

7 DETAIL-CONNECTION TO CONCRETE
SCALE: 1 1/2"=1'-0"

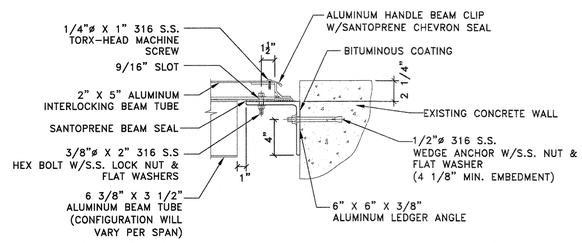

8 DETAIL-CONNECTION TO WALL
SCALE: 1 1/2"=1'-0"

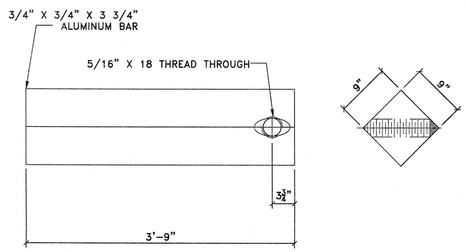

9 DETAIL-LATCH BAR
SCALE: 1"=1'-0"

APPROVED:
Richard A. Alaimo
PROFESSIONAL ENGINEER
NEW JERSEY LICENSE NO. 13195

REVISIONS	DATE	BY

RICHARD A. ALAIMO ENGINEERING COMPANY
Consulting Engineers
NJDCA 24GA27988800
200 HIGH STREET, MOUNT HOLLY, N.J.
2 MARKET STREET, PATERSON, N.J.

GRIT CHAMBER UPGRADE
GRIT CHAMBER ALUMINUM COVER DETAILS
SCALE: AS NOTED

CLIENT: WOODBRIDGE TOWNSHIP
PROJECT LOCATION: WOOBRIDGE TOWNSHIP, MIDDLESEX COUNTY, NEW JERSEY
PROJECT NO.: B-0726-0023-000
CONTRACT NO.: 1230

DATE: APRIL 2017
DESIGNED BY: AA
DRAWN BY: AA
CHECKED BY:
DEPT. HEAD:
SHEET A21
FILE NO.:

Plotted: 4/10/2017 2:56 PM Last saved: 1/4/2017 3:20 PM File Name: K:\Projects\B0726002300\Drawings\Edp-A21_Chamber_Cover_Details.dwg