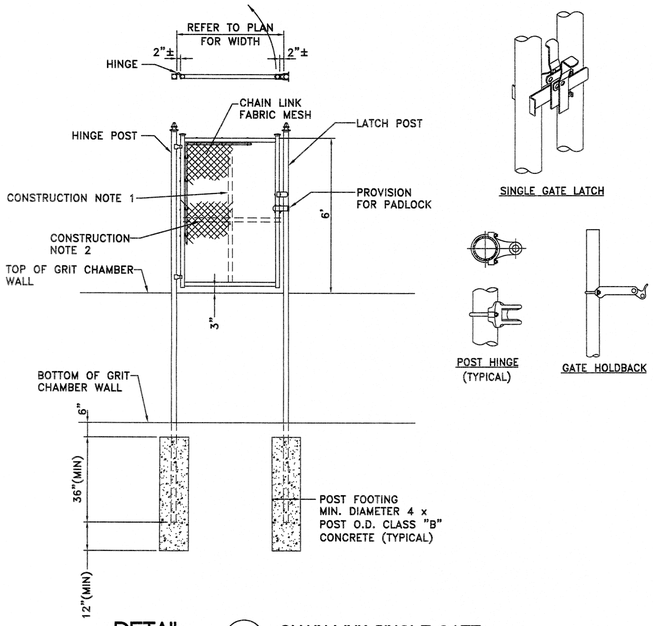

DETAIL 1 — CHAIN LINK SINGLE GATE ADJACENT TO GRIT CHAMBER WALL

SCALE: N.T.S.

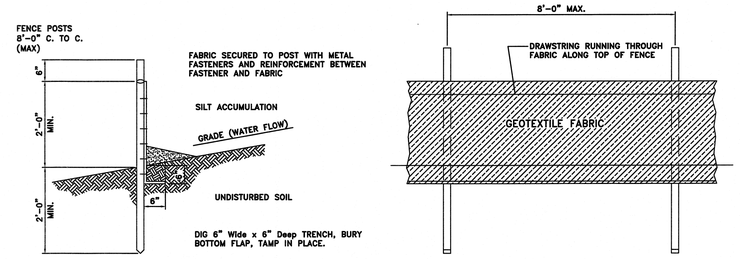

REQUIREMENTS FOR SILT FENCE

1. FENCE POSTS SHALL BE SPACED 8 FEET CENTER-TO-CENTER OR CLOSER. THEY SHALL EXTEND AT LEAST 2 FEET INTO THE GROUND AND EXTEND AT LEAST 2 FEET 6 INCHES ABOVE GROUND. POSTS SHALL BE CONSTRUCTED OF HARDWOOD WITH A MINIMUM DIAMETER THICKNESS OF 1½ INCHES.
2. A METAL FENCE WITH 6 INCH OR SMALLER OPENINGS AND AT LEAST 2 FEET HIGH MAY BE UTILIZED, FASTENED TO THE FENCE POSTS, TO PROVIDE REINFORCEMENT AND SUPPORT TO THE GEOTEXTILE FABRIC WHERE SPACE FOR OTHER PRACTICES IS LIMITED AND HEAVY SEDIMENT LOADING IS EXPECTED.
3. A GEOTEXTILE FABRIC, RECOMMENDED FOR SUCH USE BY THE MANUFACTURER, SHALL BE BURIED AT LEAST 6 INCHES DEEP IN THE GROUND. THE FABRIC SHALL EXTEND AT LEAST 2 FEET ABOVE THE GROUND. THE FABRIC MUST BE SECURELY FASTENED TO THE POSTS USING A SYSTEM CONSISTING OF METAL FASTENERS (NAILS OR STAPLES) AND A HIGH STRENGTH REINFORCEMENT MATERIAL (NYLON WEBBING, GROMMETS, WASHERS ETC.) PLACED BETWEEN THE FASTENERS AND THE GEOTEXTILE FABRIC. THE FASTENING SYSTEM SHALL RESIST TEARING AWAY FROM THE POST. THE FABRIC SHALL INCORPORATE A DRAWSTRING IN THE TOP PORTION OF THE FENCE FOR ADDED STRENGTH.

DETAIL 2 — SILT FENCE

SCALE: N.T.S.

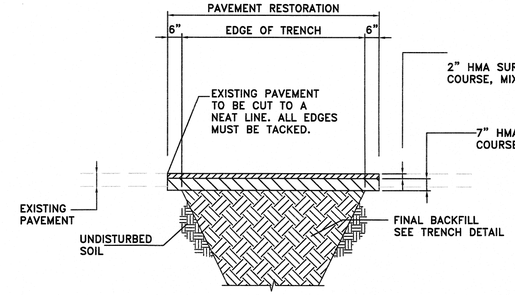

NOTES:

1. HMA BASE COURSE MATERIAL SHALL INITIALLY BE INSTALLED TO MATCH THE TOP OF THE EXISTING PAVEMENT ELEVATION AND INSPECTED ON A WEEKLY BASIS. AS REQUIRED TO PROVIDE A LEVEL PAVEMENT SURFACE, THE BASE MATERIAL SHALL BE SUPPLEMENTED WITH ADDITIONAL MATERIAL. FOLLOWING A MINIMUM OF THIRTY (30) DAYS, THE BASE MATERIAL SHALL BE REMOVED TO A DEPTH EQUAL TO THE SURFACE COURSE THICKNESS. THE SURFACE COURSE SHALL THEN BE INSTALLED SUCH THAT THE MATERIAL THICKNESSES ARE AT LEAST EQUAL TO THOSE SHOWN.

2. EXCAVATION, BACKFILL, DENSE GRADED AGGREGATE, COMPACTION, PAVEMENT RESTORATION, DISPOSAL OF EXCESS OR UNSUITABLE MATERIAL AND ALL ASSOCIATED WORK AS SPECIFIED SHALL BE INCLUDED IN THE PRICE BID FOR THE PIPING.

DETAIL 3 — TRENCH RESTORATION BITUMINOUS PAVEMENT AREAS

SCALE: N.T.S.

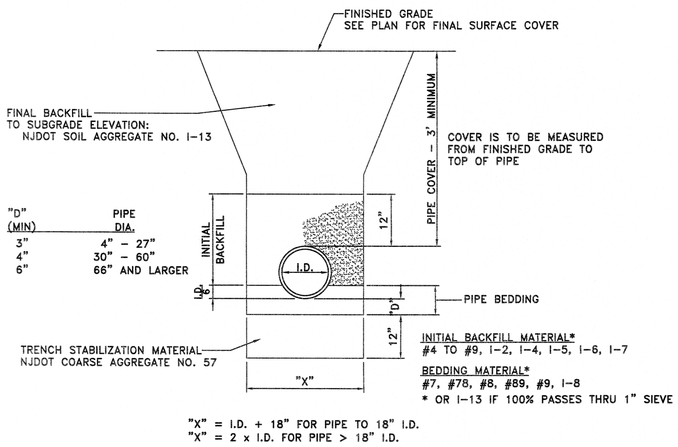

DETAIL 4 — FORCE MAIN TRENCH CONSTRUCTION + BACKFILLING

SCALE: N.T.S.

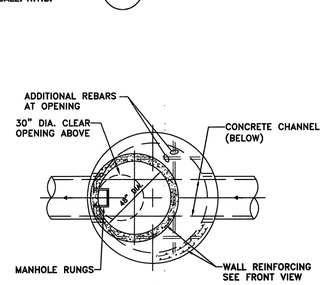

SLAB PLAN

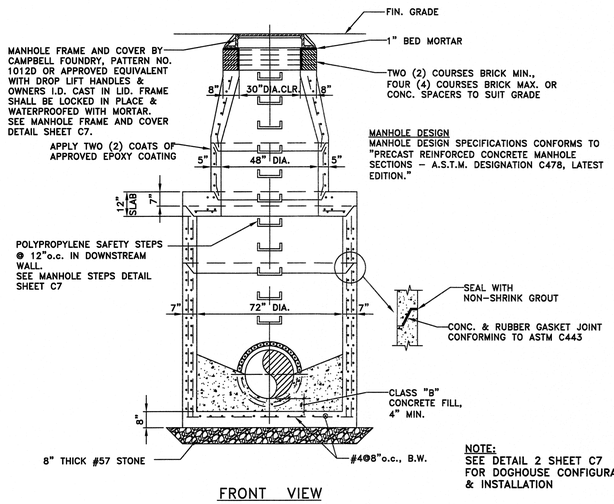

MANHOLE DESIGN

MANHOLE DESIGN SPECIFICATIONS CONFORMS TO "PRECAST REINFORCED CONCRETE MANHOLE SECTIONS – A.S.T.M. DESIGNATION C478, LATEST EDITION."

NOTE:

SEE DETAIL 2 SHEET C7 FOR DOGHOUSE CONFIGURATION & INSTALLATION

FRONT VIEW

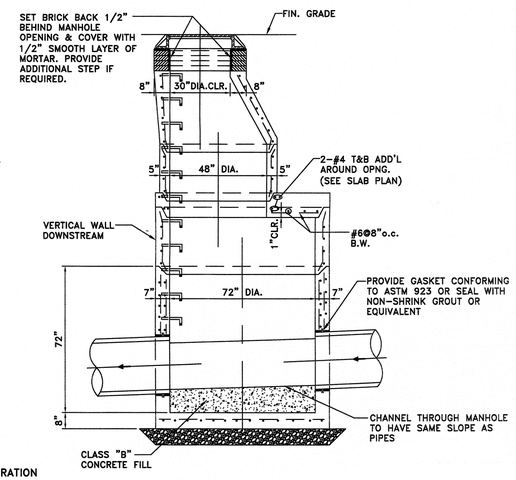

SIDE VIEW

DETAIL 6 — 6' DIAMETER SANITARY SEWER MANHOLE

SCALE: N.T.S.

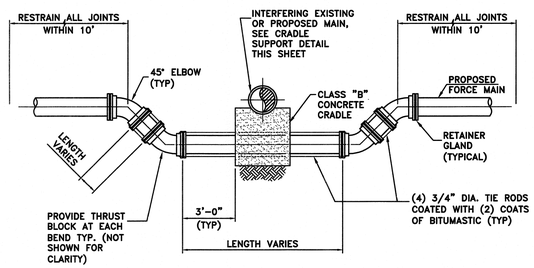

DETAIL 5 — PIPE CROSSING AT POINTS OF INTERFERENCE

SCALE: N.T.S.

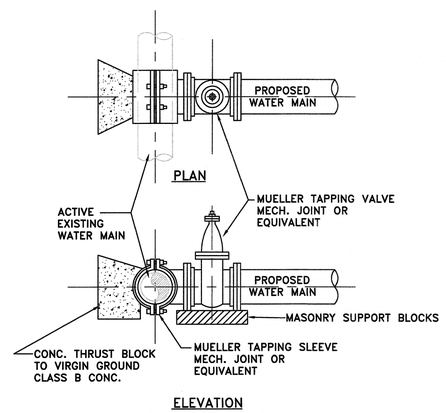

DETAIL 8 — WET TAP

SCALE: N.T.S.

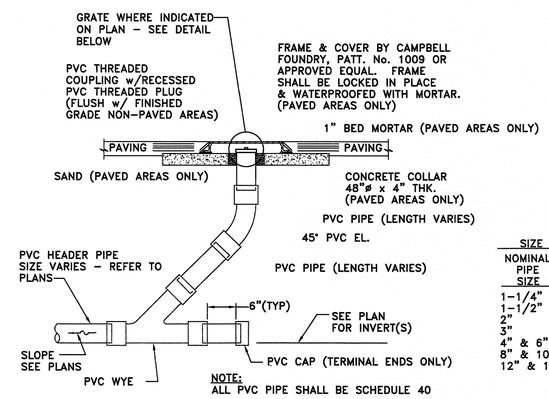

NOTE:

ALL PVC PIPE SHALL BE SCHEDULE 40

SIZE OF CLEANOUT

NOMINAL PIPE SIZE	NOMINAL SIZE OF CLEANOUT
1-1/4"	1-1/4"
1-1/2"	1-1/2"
2"	2"
3"	3"
4" & 6"	4"
8" & 10"	6"
12" & 15"	8"

DETAIL 9 — CLEANOUT

SCALE: N.T.S.

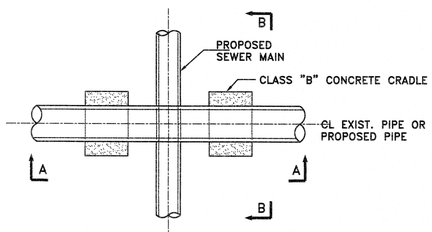

PLAN

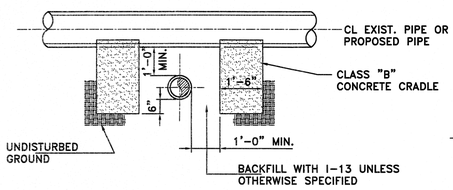

SECTION A–A

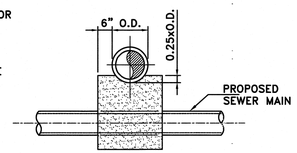

SECTION B–B

CONCRETE CRADLE NOTE

USE CONC. CRADLES WHERE LESS THAN 18" VERTICAL SEPARATION IS PROVIDED BETWEEN THE OUTSIDE WALLS OF THE SEWER MAIN AND ANY PIPE CROSSING ABOVE.

DETAIL 7 — CONCRETE CRADLE

SCALE: N.T.S.

APPROVED: Richard A. Alaimo 4/13/17

Richard A. Alaimo
PROFESSIONAL ENGINEER
NEW JERSEY LICENSE NO. 13195

REVISIONS	DATE	BY
1. GENERAL	04/13/17	CAF

RICHARD A. ALAIMO ENGINEERING COMPANY
Consulting Engineers
NJDCA 24GA27988800
200 HIGH STREET, MOUNT HOLLY, N.J.
2 MARKET STREET, PATERSON, N.J.

GRIT CHAMBER UPGRADE

CONSTRUCTION DETAILS

SCALE: AS NOTED

CLIENT: WOODBRIDGE TOWNSHIP

PROJECT LOCATION: WOOBRIDGE TOWNSHIP, MIDDLESEX COUNTY, NEW JERSEY

PROJECT NO.: B-0726-0023-000

CONTRACT NO.: 1230

DATE: APRIL 2017

DESIGNED BY: LMG

DRAWN BY: LMG

CHECKED BY:

DEPT. HEAD:

SHEET C6

FILE NO.:

Plotted: 4/12/2017 5:04 PM Last saved: 4/12/2017 4:20 PM File Name: K:\Projects\B0726003000\Drawings\City-C06_Construction Details.dwg