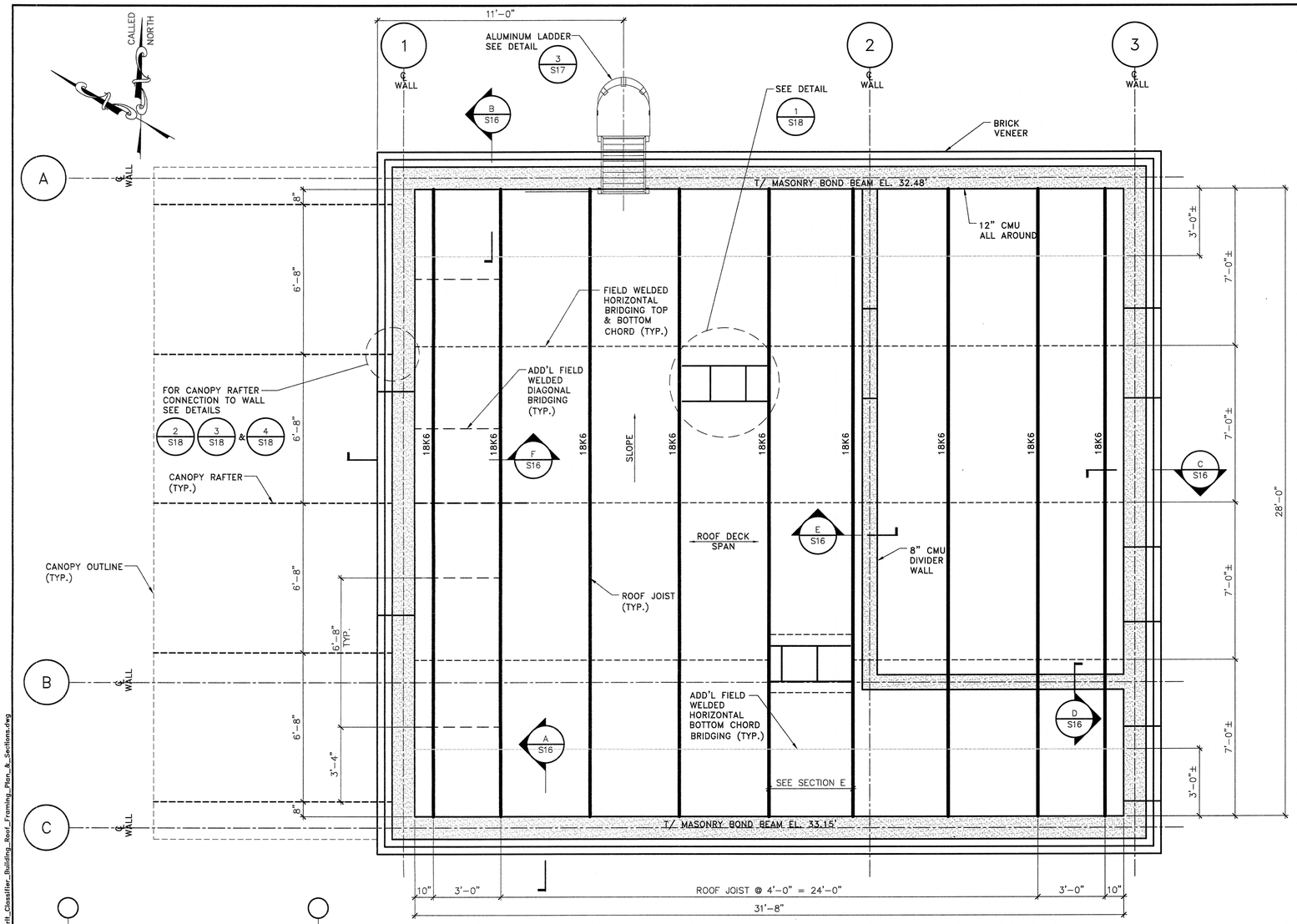

1 GRIT CLASSIFIER ROOF FRAMING PLAN

SCALE 3/8"=1'-0"

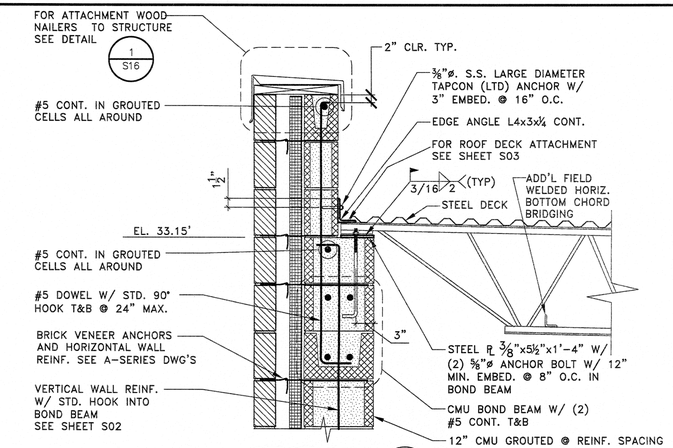

SECTION A

SCALE: 1"=1'-0"

NOTE:
1. FOR ROOFING DETAILS, WOOD, FLASHINGS, ETC. SEE A-SERIES DWGS.
2. FOR VERTICAL WALL REINFORCING SEE SHEET S02.
3. FOR FRP GUARD RAIL MOUNTED ON PARAPET WALL SEE A-SERIES DWGS.

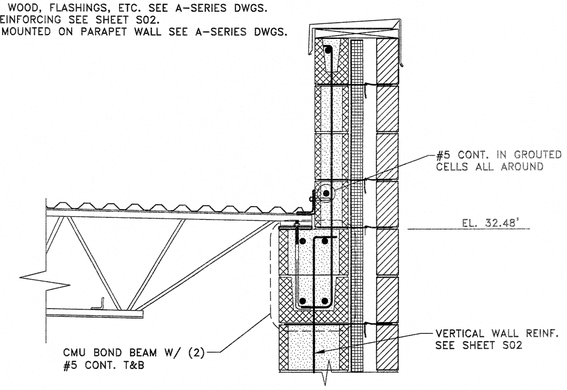

SECTION B

SCALE: 1"=1'-0"

NOTE:
FOR DEAILS NOT SHOWN SEE SECTION A ON THIS SHEET.

PARAPET WALL COPING NOT SHOWN FOR CLARITY. SEE A-SERIES DWG'S.

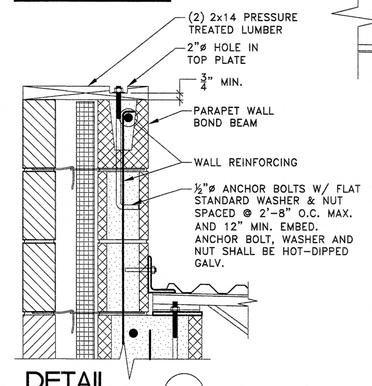

DETAIL 1

SCALE: N.T.S.

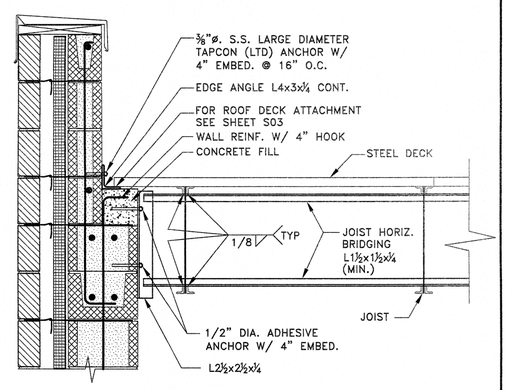

SECTION C

SCALE: 1"=1'-0"

NOTE:
FOR DEAILS NOT SHOWN SEE SECTION A ON THIS SHEET.

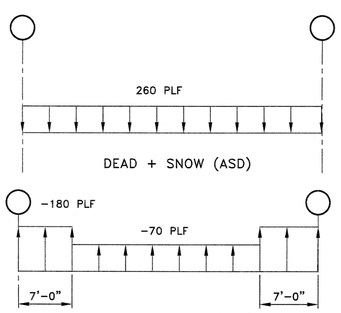

JOIST LOAD DIAGRAMS

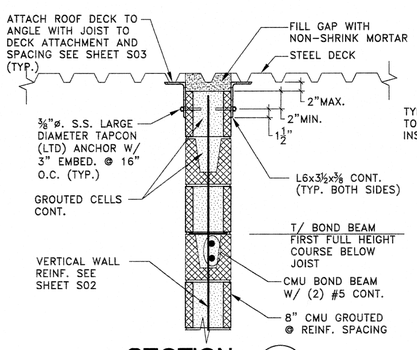

SECTION D

SCALE: 1"=1'-0"

NOTE:
CUT CMU AROUND JOISTS, GROUT SOLID

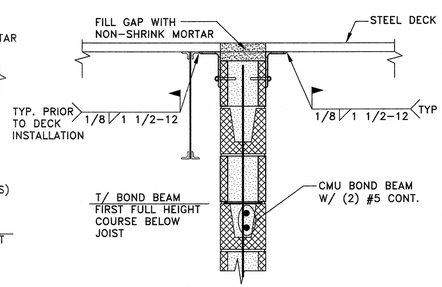

SECTION E

SCALE: 1"=1'-0"

NOTE:
FOR DEAILS NOT SHOWN SEE SECTION D ON THIS SHEET.

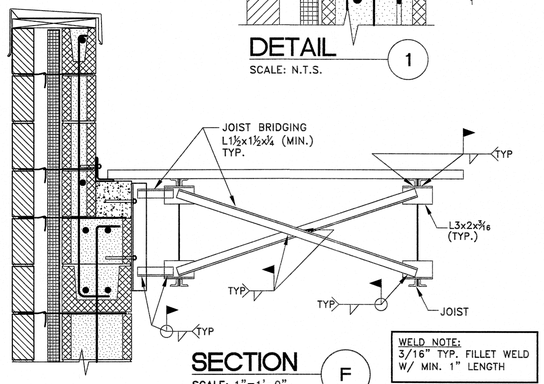

SECTION F

SCALE: 1"=1'-0"

WELD NOTE:
3/16" TYP. FILLET WELD W/ MIN. 1" LENGTH

NOTE:
FOR DEAILS NOT SHOWN SEE SECTION C ON THIS SHEET.

GENERAL NOTES:

1. FOR STEEL ROOF DECK, DECK ATTACHMENT AND GENERAL STEEL NOTES & DETAILS SEE SHEET S03.

APPROVED: 4/13/17

Richard A. Alaimo
PROFESSIONAL ENGINEER
NEW JERSEY LICENSE NO. 13195

REVISIONS	DATE	BY

RICHARD A. ALAIMO ENGINEERING COMPANY
Consulting Engineers
NJDCA 24GA27988800
200 HIGH STREET MOUNT HOLLY, N.J.
2 MARKET STREET PATERSON, N.J.

GRIT CHAMBER UPGRADE

GRIT CLASSIFIER BUILDING ROOF FRAMING PLAN AND SECTIONS

SCALE: AS NOTED

CLIENT: WOODBRIDGE TOWNSHIP

PROJECT LOCATION: WOOBRIDGE TOWNSHIP MIDDLESEX COUNTY NEW JERSEY

PROJECT NO.: B-0726-0023-000

CONTRACT NO.: 1230

DATE: APRIL 2017

DESIGNED BY: PG

DRAWN BY: PG

CHECKED BY:

DEPT. HEAD:

SHEET S16

FILE NO.:

Plotted: 4/10/2017 3:28 PM Last saved: 1/4/2017 10:02 AM File Name: K:\Projects\B0726002300\Drawings\Cdy-S16_Grit_Classifier_Building_Roof_Framing_Plan_&_Sections.dwg